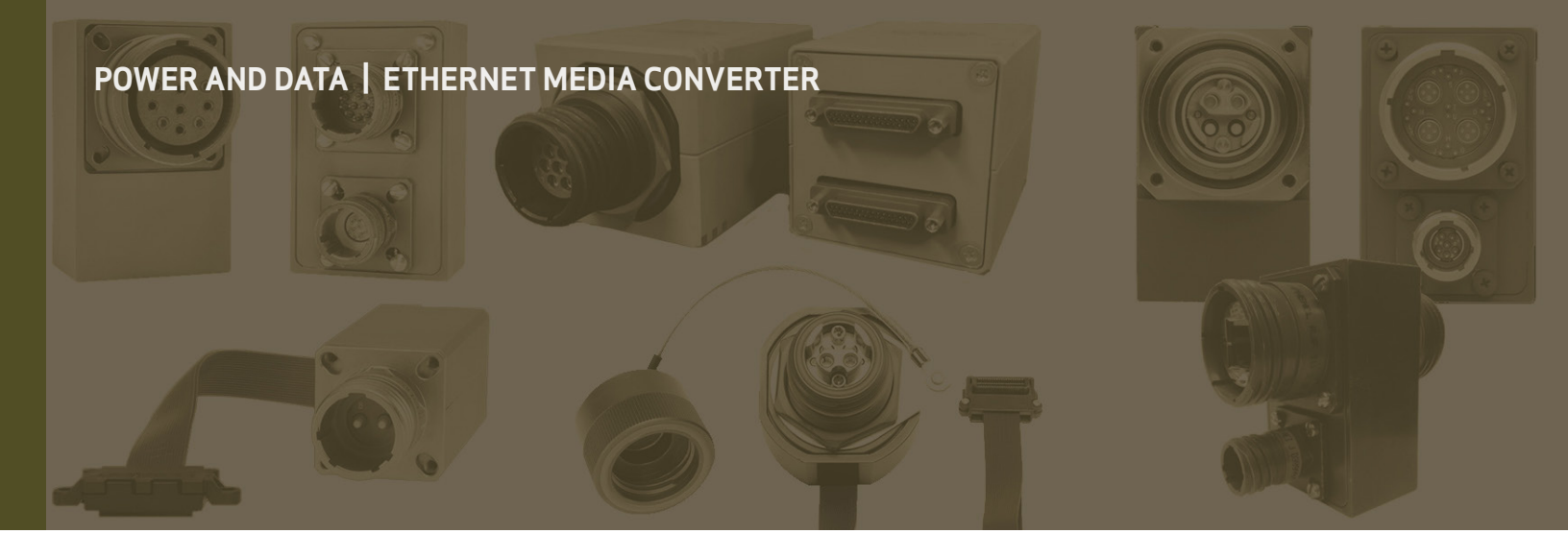

SATURN SERIES

GIGABIT ETHERNET, SEALED RJ-45 AND LC, 1000BASE-T / SX MEDIA CONVERTER, 24 VDC, MULTIMODE, 850 nM VCSEL's

Saturn series Gigabit Ethernet media converters consist of optoelectronic transmitter and receiver functions integrated along with the 1000Base-T Ethernet electrical to 1000Base-SX Ethernet optical media conversion circuitry into an environmentally sealed unit.

The optical transmitters are high output 850 nM VCSEL's. The optical receivers consist of InGaAs PIN and preamplifier assemblies and limiting post-amplifiers.

The optical interface to the Saturn series optical media converters is an Amphenol LC-Field® connector enabling interconnection to preterminated LC based optical fiber cable assemblies.

The electrical interface to the Saturn series optical media converters is an Amphenol RJ-Field® connector enabling interconnection to preterminated RJ-45 Cat-5 patch cable assemblies.

Saturn series Gigabit Ethernet media converters are vibration isolated, environmentally hardened components designed for use in harsh environment applications.

- Sealed against liquid and solid contaminants
- Shock and vibration resistant

MOOG

SINGLE PORT SATURN SERIES, SEALED RJ-45 / LC, 1000BASE-T TO 1000BASE-SX, GIGABIT ETHERNET MEDIA CONVERTER, MULTIMODE, 24 VDC, 850 NM VCSEL'S

Single Port, LC / RJ-45
Sealed LC to RJ-45 Optical to Electrical Media Converter

FEATURES

- Compliant with IEEE-802.3u Fast Ethernet
- Optical fiber link distances up to 2.0 kilometers
- Maximum optical channel bit error rate less than 1×10^{-12}
- Operating temperature range from -40° to +85° C
- Shock, vibration and ESD resistant per IEC 60068
- Olive drab cadmium or nickel plating meets stringent EMI / RFI performance specifications
- Aluminum alloy chassis and cylindrical connectors are strong, durable, corrosion resistant and light weight
- *LC-Field® compliant optical fiber connector interface
- *RJ-Field® electrical interface provides robust interconnection to vehicle wiring

APPLICATIONS

Saturn series Gigabit Ethernet media converters enable high speed network communications over long distances in harsh environments.

- Gigabit Ethernet switches and peripherals
- Telecom and datacom switch / router rack-to-rack links
- Storage or computation clusters

The Amphenol RJ-Field® and LC-Field® connectors provide sealed optical and electrical interfaces that are water-tight to IP67 / NEMA-4x when mated.

The multimode optical fi ber interface supports applications where copper cable link distance, bandwidth, weight or bulk make the use of twisted pair, twinax or quadrax copper conductors unacceptable.

**RJ-Field® and LC-Field® are trademarks of Amphenol*

ORDERING INFORMATION

Application	Part Number
1000Base-T to 1000Base-SX, OD-Cad.	M45L-2SAT-FW
1000Base-T to 1000Base-SX, Nickel	M45L-2SAT-FF

SINGLE PORT SATURN SERIES, SEALED RJ-45 / LC, 1000BASE-T TO 1000BASE-SX, GIGABIT ETHERNET MEDIA CONVERTER, MULTIMODE, 24 VDC, 850 NM VCSEL'S

ABSOLUTE MAXIMUM RATINGS

Absolute maximum limits mean that no catastrophic damage will occur if the product is subjected to these ratings for short periods, provided each limiting parameter is in isolation and all other parameters have values within the performance specification. It should not be assumed that limiting values of more than one parameter can be applied to the product at the same time.

Parameter	Symbol	Minimum	Typical	Maximum	Unit
Storage Temperature	T_S	-55		+100	°C
Supply Voltage	V_{CC}	-0.5		45.0	V
Data Input Voltage	V_I	-0.5		V_{CC}	V

RECOMMENDED OPERATING CONDITIONS

Parameter	Symbol	Minimum	Typical	Maximum	Unit
Operating Temperature	T_A	-40		+85	°C
Supply Voltage	V_{CC}	+18.0		+36.0	VDC
Power Supply Noise (p-p)	N_P			200	mV

INTERFACE SPECIFICATIONS COMPLIANCE

Requirement	Feature	Condition	Notes
EN 61000-4-2	ESD	HBM	6 kV Contact / 8 kV Air Discharge
IEC 60068-2-6	Vibration	10 g	10 Hz - 500 Hz
IEC 60068-2-27	Shock	15 g, 50 g	11ms Duration
FCC CFR47	EMC	Part 15	
EN 55022	EMC	Class A	
UL	Flame Resistance	94 V-0	

MATERIALS

Item	Detail	Notes
Cylindrical Connector Shells	Aluminum Alloy	
Shell and Housing Plating	Olive Drab Cadmium or Nickel	
Connector Inserts	Thermoplastic	
Interfacial Seals	Elastomer	
Optical Alignment Sleeves	Composite Polymer	
Printed Circuits	Polyimide / FR-4	
Housing	Aluminum Alloy	
Weight	6.1 oz / 172.932 grams	

SINGLE PORT SATURN SERIES, SEALED RJ-45 / LC, 1000BASE-T TO 1000BASE-SX, GIGABIT ETHERNET MEDIA CONVERTER, MULTIMODE, 24 VDC, 850 NM VCSEL'S

OPTICAL TRANSMITTERS T_A = OPERATING TEMPERATURE RANGE

Parameter	Symbol	Minimum	Typical	Maximum	Unit
Optical Output Power	P_O	-9.5		-4.0	dBm
Optical Output Wavelength	λ_{OUT}	830	850	860	nM
Spectral Width	$\Delta\lambda_{RMS}$			0.85	nM

OPTICAL RECEIVERS T_A = OPERATING TEMPERATURE RANGE

Parameter	Symbol	Minimum	Typical	Maximum	Unit
Optical Sensitivity	P_I	-17.0		-2.0	dBm
Optical Wavelength	λ_{IN}	830	850	860	nM

POWER SUPPLY CURRENT T_A = OPERATING TEMPERATURE RANGE

Parameter	Symbol	Typical	Maximum	Unit
Supply Current per Port @ 24 VDC	I_{CCT}	100	150	mA

OPTICAL FIBER LINK DISTANCES

Protocol	Cable Specification	Distance
Gigabit Ethernet - IEEE-802.3:2005 - 1000BASE-SX	62.5 / 125μ - 200 MHz*Km	275 M
	50 / 125μ - 500 MHz*Km	550 M

COPPER LINK DISTANCES

Protocol	Cable Specification	Distance
Gigabit Ethernet - IEEE-802.3:2005 - 1000BASE-T	TIA/EIA-568-B Cat 5E - for other transmission media, please consult the factory	100 M

SINGLE PORT SATURN SERIES, SEALED RJ-45 / LC, 1000BASE-T TO 1000BASE-SX, GIGABIT ETHERNET MEDIA CONVERTER, MULTIMODE, 24 VDC, 850 NM VCSEL'S

OUTLINE DRAWING

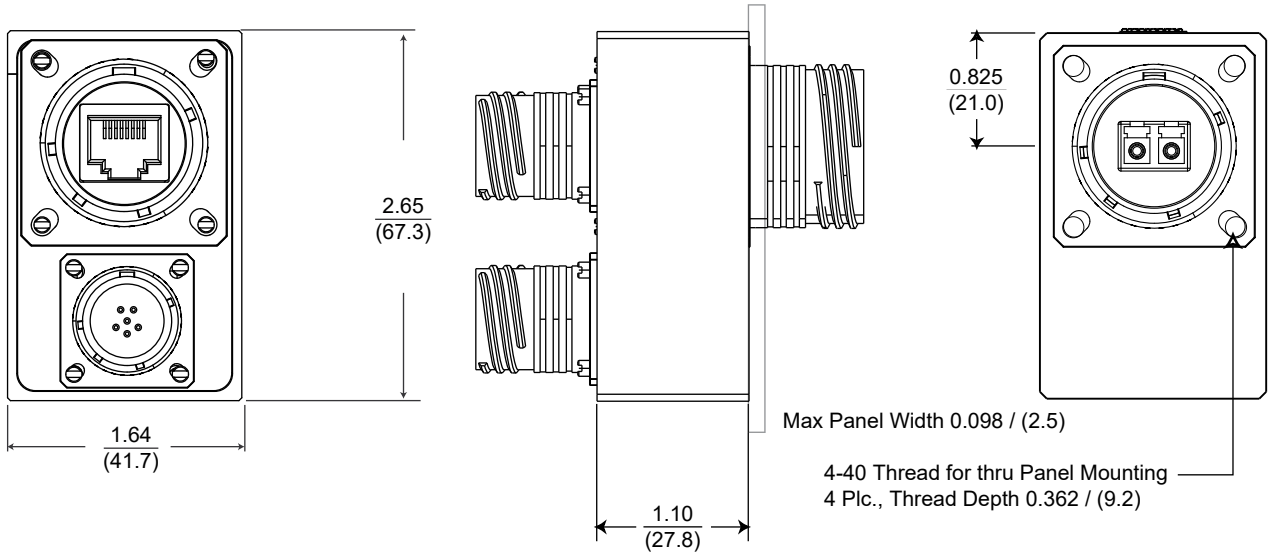

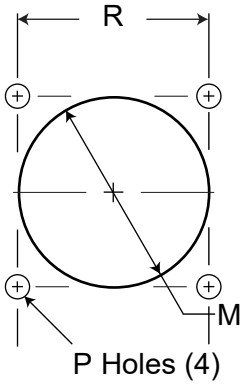

Dimensions are shown as: inches (mm)

PANEL CUTOUT DIMENSIONS - REAR PANEL MOUNTING ONLY

Shell Size Code	Shell Size	M Min	P Holes	R Bsc
F	19	1.297 (32.94)	0.133 (3.4) 0.123 (3.1)	1.156 (29.4)

SINGLE PORT SATURN SERIES, SEALED RJ-45 / LC, 1000BASE-T TO 1000BASE-SX, GIGABIT ETHERNET MEDIA CONVERTER, MULTIMODE, 24 VDC, 850 NM VCSEL'S

MEDIA CONVERTER INSERT ARRANGEMENTS

	Media Converter Insert Pin Numbers	Media Converter Pin Functions	Mating Cable Plug Connector P/N
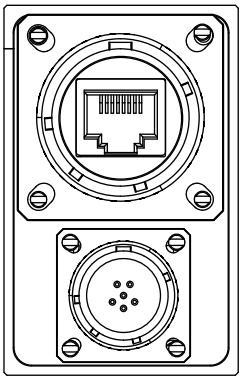	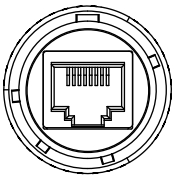	**1000Base-T** Pin 1 = MDA+ Pin 2 = MDA Pin 3 = MDB+ Pin 6 = MDB- Pin 4 = MDC+ Pin 5 = MDC- Pin 7 = MDD+ Pin 8 = MDD-	See Appendix A3 Cat-5E Twisted Pair Cable
	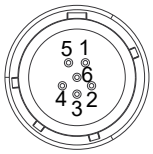	**Power Supply** Pin 1 = Case Ground Pin 2 = Case Ground Pin 3 = Case Ground Pin 4 = Case Ground Pin 5 = VEE Pin 6 = VCC	See Appendix A4 20 Guage Copper Wire
	Media Converter Fiber Pin Numbers and Functions Shown - Mating Cable Plug Opposite		

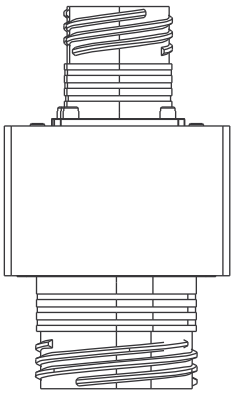

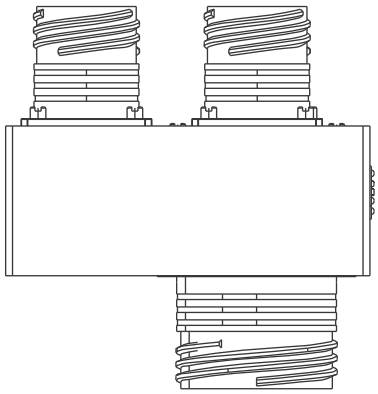

	Media Converter Insert Pin Numbers	Media Converter Pin Functions	Mating Cable Plug Connector P/N
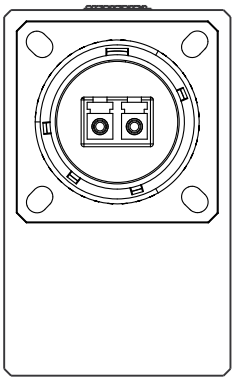	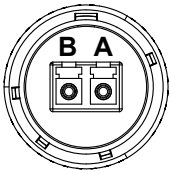	Position B = Optical TX Position A = Optical RX	See Appendix A2
	Media Converter Fiber Pin Numbers and Functions Shown - Mating Cable Plugs Opposite For LC-Field Protective Caps, See Appendix A1		

APPENDIX A1 - AMPHENOL LC-FIELD® RECEPTACLE PROTECTIVE CAPS*

Plating	Wire Type	Part Number*
Olive Drab Cadmium	Nylon Cord	BFNTVW19
Olive Drab Cadmium	Metal Chain	BFTVW19
Nickel	Nylon Cord	BFNTVF19
Nickel	Metal Chain	BFTVF19

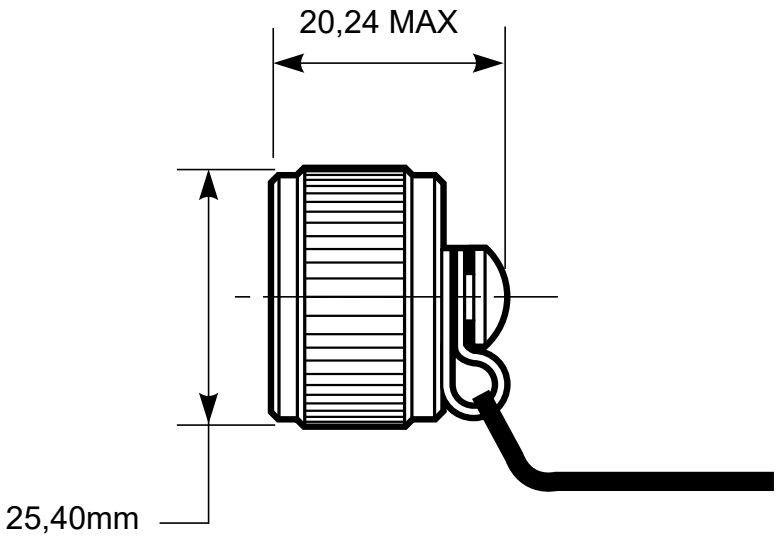

Nylon Cord shown above

*Contact your local Amphenol Sales Representative for more information about the Amphenol LC-Field® Protective Caps

APPENDIX A2

AMPHENOL LC-FIELD® CABLE PLUGS*

Plating	Amphenol Part Number*
Olive Drab Cadmium	LCFTV6MGN
Nickel	LCFTV6MNN

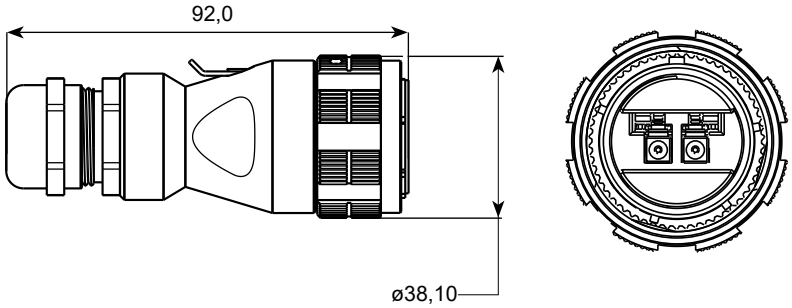

*Contact your local Amphenol Sales Representative for more information about the Amphenol LC-Field® Cable Plugs.

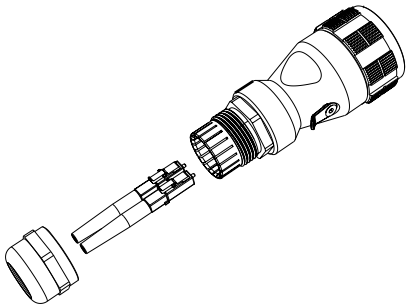

APPENDIX A3

AMPHENOL RJ-FIELD® CABLE PLUGS*

Plating	Amphenol Part Number*
Olive Drab Cadmium	RJFTV6MG
Nickel	RJFTV6MN

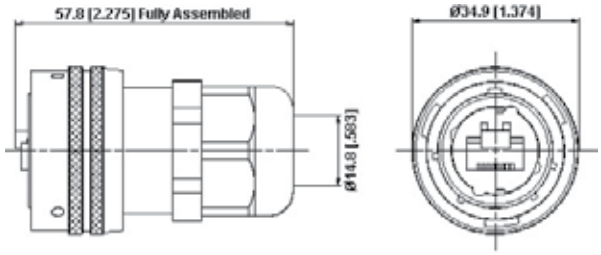

*Contact your local Amphenol Sales Representative for more information about the Amphenol LC-Field® Cable Plugs.

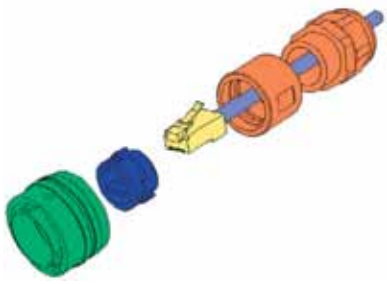

SINGLE PORT SATURN SERIES, SEALED RJ-45 / LC, 1000BASE-T TO 1000BASE-SX, GIGABIT ETHERNET MEDIA CONVERTER, MULTIMODE, 24 VDC, 850 NM VCSEL'S

APPENDIX A4 - POWER CABLE - PLUG CONFI GURATION

POWER CABLE PLUG - SOCKET INSERT*

Plating	Generic Part Number	Amphenol Part Number*
Olive Drab Cadmium	D38999 / 26WA35SN	TV06RW-9-35SN
Nickel	D38999 / 26FA35SN	TV06RF-9-35SN

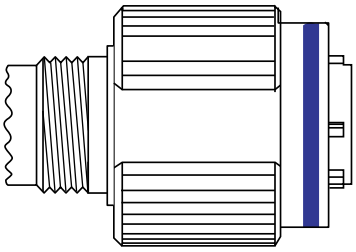

POWER CABLE PLUG - SOCKET CONTACTS*

Configuration	Generic Part Number	Amphenol Part Number*
Size 22D	M39029 / 56-348	10-407035-725

*Contact your local Amphenol Sales Representative for more information about the Amphenol LC-Field® Cable Plugs.

192 Bob Fitz Road, Johnson City, TN 37615
salesmp@moog.com
moogprotokraft.com